Programmable Array Logic (PAL)

11.11 Progra...

One of the most commonly used user-programmable logic devices is Programmable Array Logic (PAL). It has a programmable AND array and a fixed (i.e. nonprogrammable) OR array whose basic configuration is shown in Fig.20. The AND gates are programmed to provide the product terms of the Boolean function to be implemented whereas each OR gate has inputs from some of the AND gate outputs.

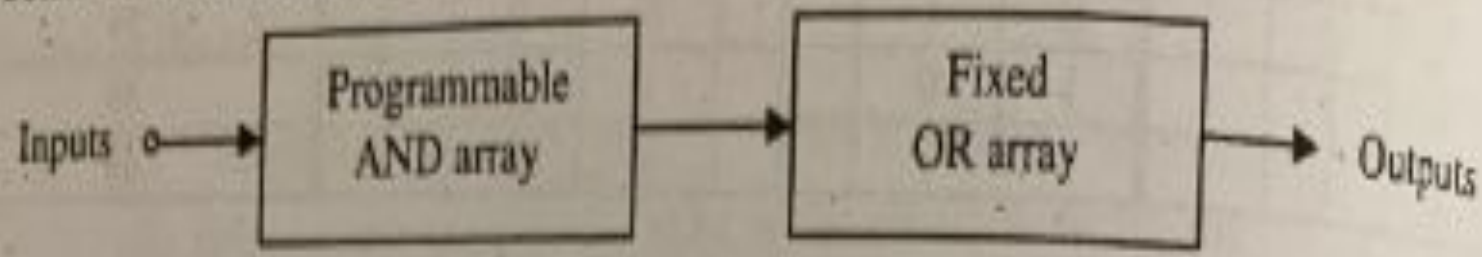

Fig.20: Block diagram of PAL architecture

A PAL is usually characterized by the number of inputs, the number of programmable AND gates and the number of fixed OR gates. To illustrate the basic concept, let us consider the following PAL architecture. It has 5 inputs, 8 programmable AND gates, and 4 fixed OR gates.

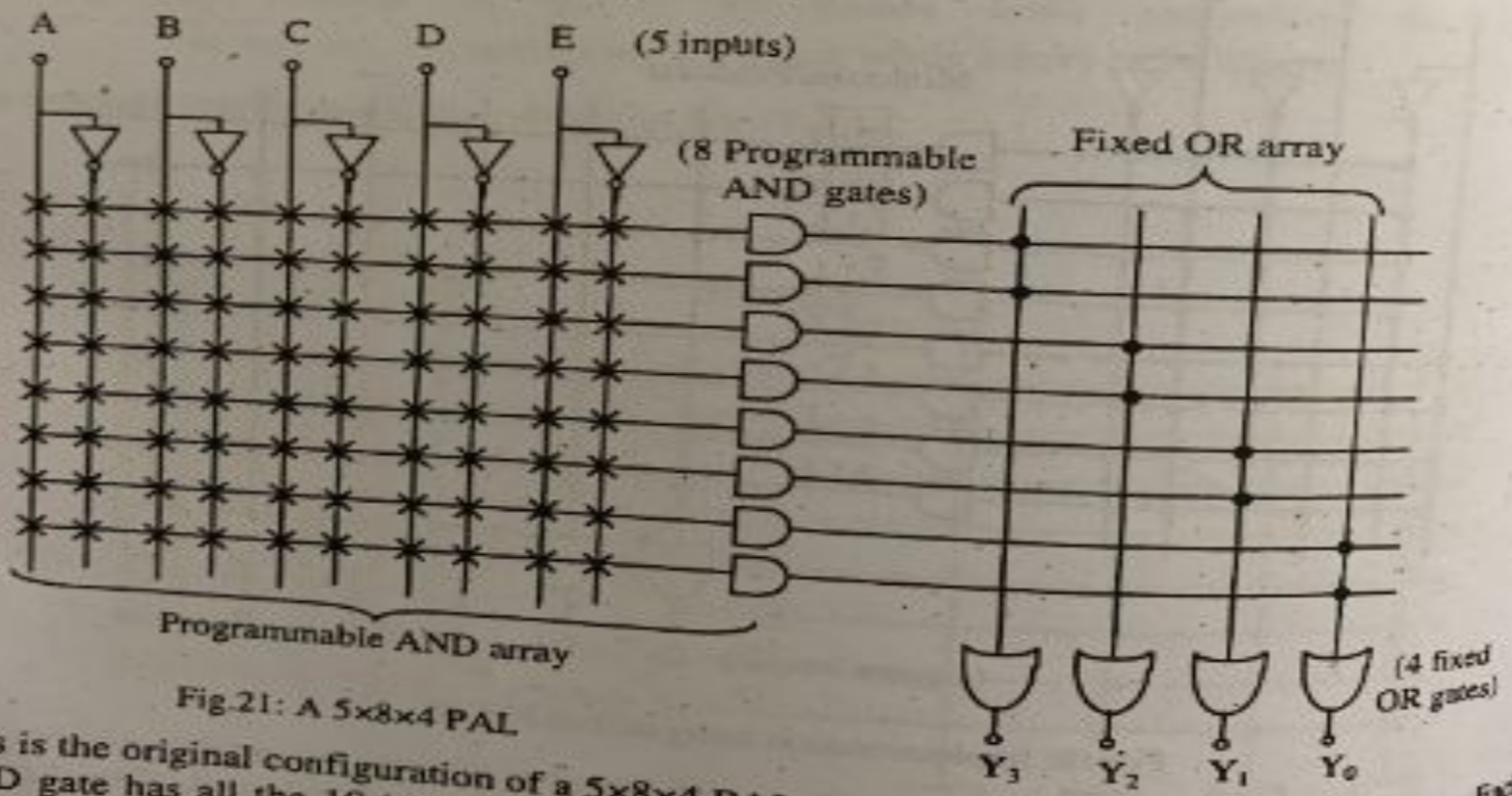

Fig.21: A 5×8×4 PAL

This is the original configuration of a 5×8×4 PAL when produced by the manufacturers. Each AND gate has all the 10 inputs (in complemented and uncomplemented form) with fusible links intact. So each AND gate can be programmed to generate any desired product of the inputs. On the other hand, each OR gate is connected permanently to only two AND outputs.

well exp... functions can be

Example 4. Design a Binary-to-Gray code converter using PAL.

Solution: Draw the truth table of binary-to-gray code conversion

Truth table of a 4-bit Binary-to-Gray conversion

Binary input				Gray code output			
B_3	B_2	B_1	B_0	G_3	G_2	G_1	G_0
0	0	0	0	0	0	0	0
0	0	0	1	0	0	0	1
0	0	1	0	0	0	1	1
0	0	1	1	0	0	1	0
0	1	0	0	0	1	1	0
0	1	0	1	0	1	1	1
0	1	1	0	0	1	0	1
0	1	1	1	0	1	0	0
1	0	0	0	1	1	0	0
1	0	0	1	1	1	0	1
1	0	1	0	1	1	1	1
1	0	1	1	1	1	1	0
1	1	0	0	1	0	1	0
1	1	0	1	1	0	1	1
1	1	1	0	1	0	0	1
1	1	1	1	1	0	0	0

Now simplify the output functions G_3, G_2, G_1, and G_0 using k-map or some other methods as sum of products. After simplification, the functions can be written as follows:

$$G_3 = B_3,\quad G_2 = B_3\overline{B_2} + \overline{B_3}B_2,\quad G_1 = B_2\overline{B_1} + \overline{B_2}B_1,\quad G_0 = B_1\overline{B_0} + \overline{B_1}B_0$$

Observe carefully that the maximum number of product terms of a function is 2. So, express each of these functions as the sum of 2 product terms. This is given below.

$$G_3 = B_3 + 0,\quad G_2 = B_3\overline{B_2} + \overline{B_3}B_2,\quad G_1 = B_2\overline{B_1} + \overline{B_2}B_1,\quad G_0 = B_1\overline{B_0} + \overline{B_1}B_0$$

From these functions we can conclude that there are

i. [illegible]put variables,

ii. 8 product terms, and

iii. 4 output functions.

Clearly, we need a 4×8×4 PAL to perform the conversion. Since each function has 2 product terms, among the 8 programmable AND gates of the 4×8×4 PAL, the first 2 AND gates are permanently connected to function G_3; then the next 2 AND gates to function G_2 and so on. The architecture of such a 4×8×4 PAL is shown below.

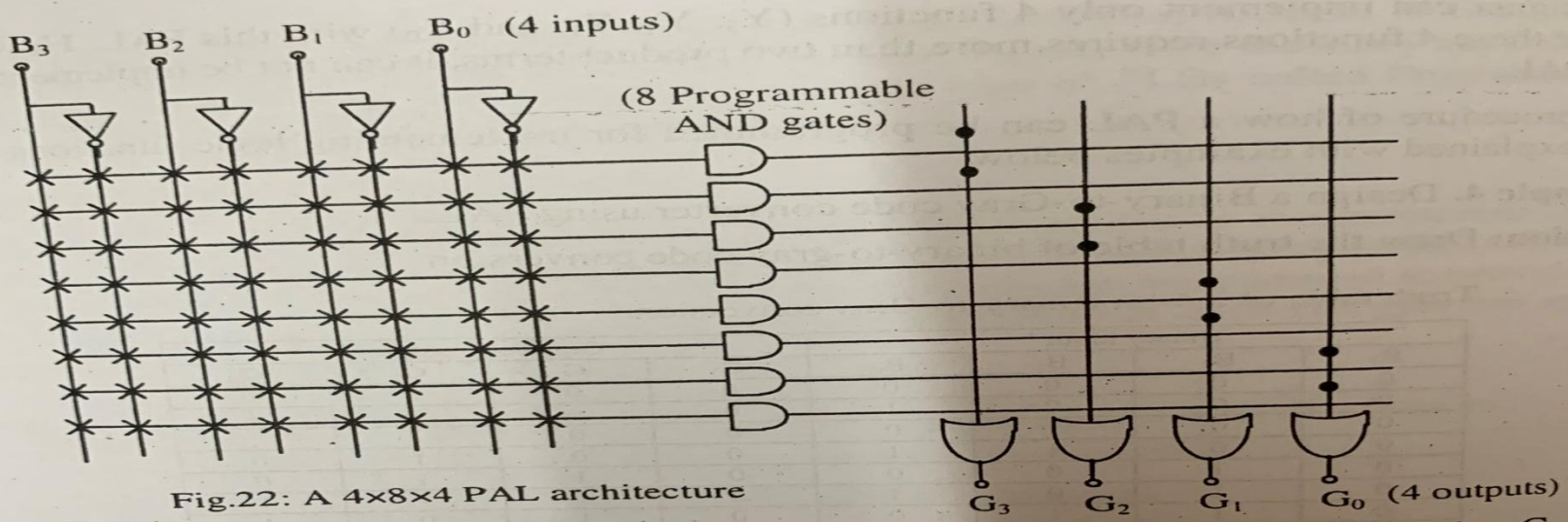

Fig.22: A 4×8×4 PAL architecture

After purchasing such a 4×8×4 PAL of Fig.22, a designer can implement the function G_3, G_2, G_1, and G_0 using software required for programming PALs. The final implementation is shown in Fig.23.

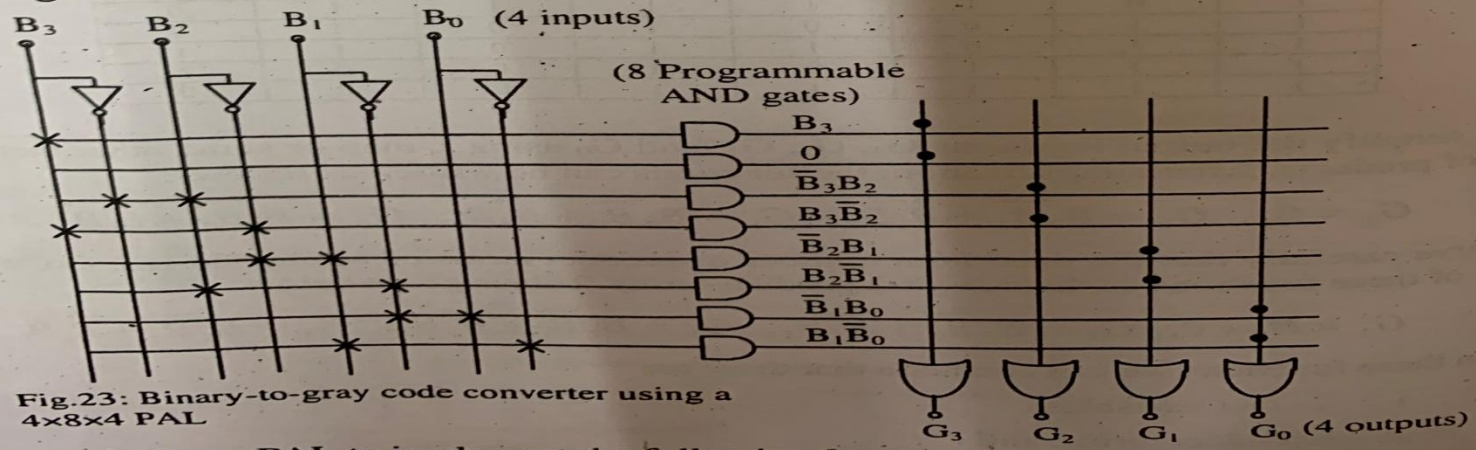

Fig.23: Binary-to-gray code converter using a 4×8×4 PAL

Example 5. Use a PAL to implement the following functions

G_3 G_2

Example 5. Use a PAL to implement the following functions

$$F_1(A,B,C,D,E,F) = \overline{A} + D + \overline{B}CF$$

$$F_2(A,B,C,D,E,F) = BD\overline{F} + \overline{D}E + CE + \overline{C}DE\overline{F}$$

$$F_3(A,B,C,D,E,F) = \overline{C}D + AE + \overline{D}E$$

$$F_4(A,B,C,D,E,F) = \overline{C}D + \overline{BDF}$$

From these functions we can conclude that there are

i. 6 input variables,

ii. 16 product terms, and

iii. 4 output functions.

Clearly, we need a 6×16×4 PAL to implement the functions. Since each function has 4 product terms, among the 16 programmable AND gates of the 6×16×4 PAL, the first 4 AND gates are permanently connected to function F_1; then the next 4 AND gates to function F_2 and so on. The architecture of such a 6×16×4 PAL is shown in Fig.24 below.

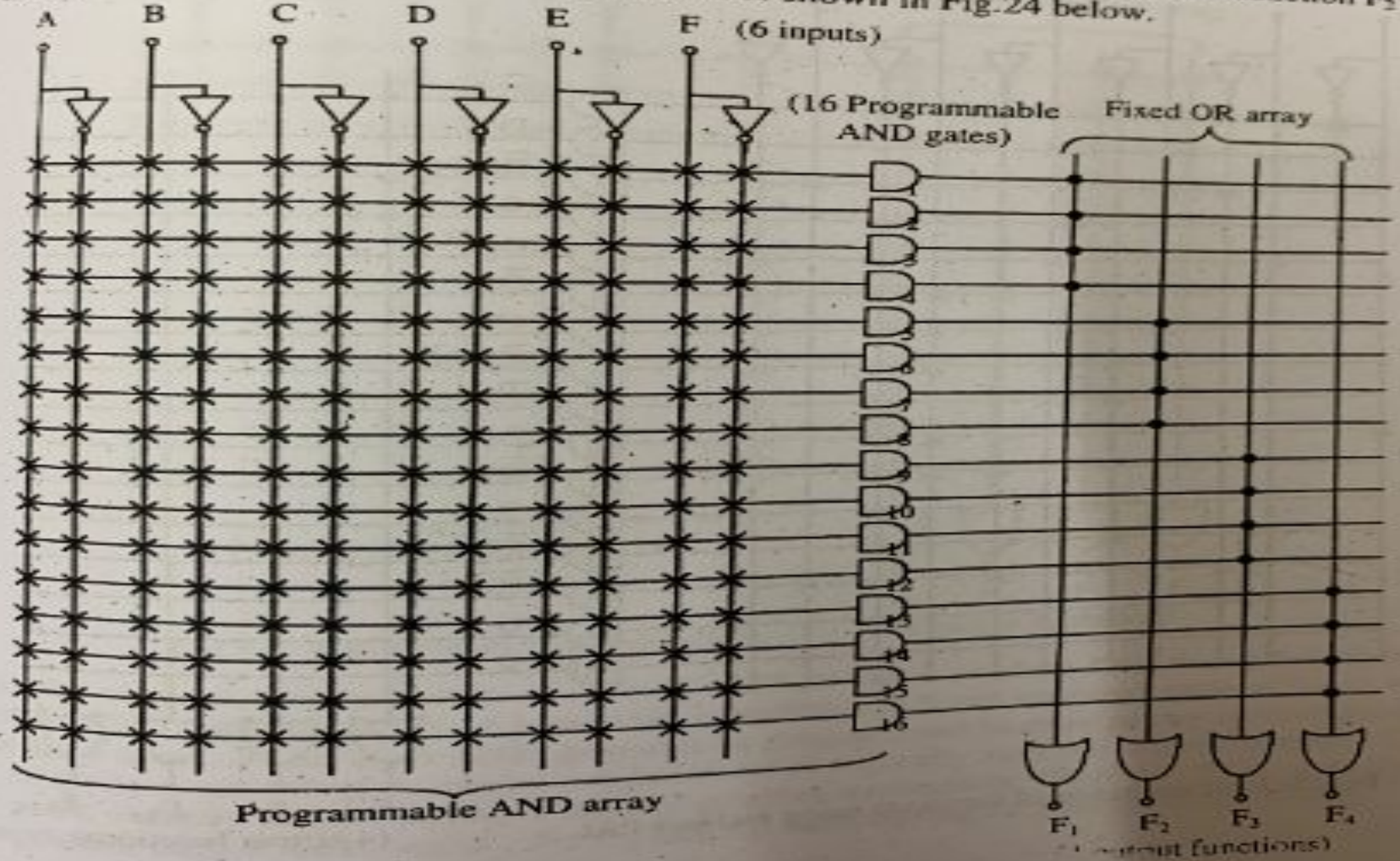

Fig.24: A 6×16×4 PAL architecture

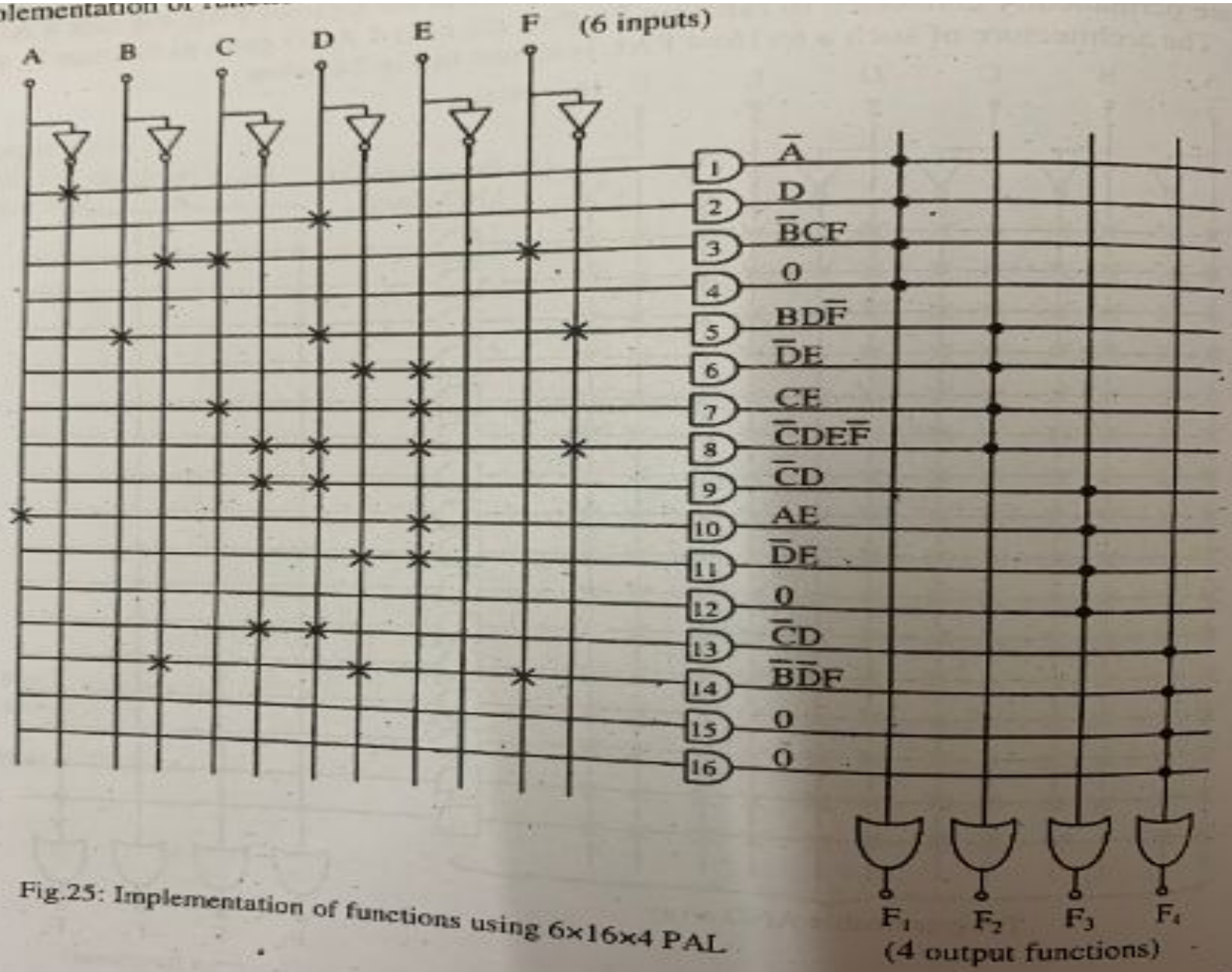

Fig.25: Implementation of functions using 6×16×4 PAL

ROM, PAL and PLA Configurations

(a) Programmable read-only memory (PROM)

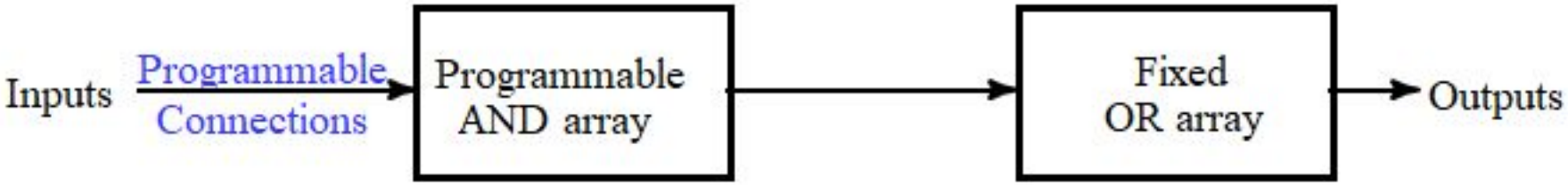

(b) Programmable array logic (PAL) device

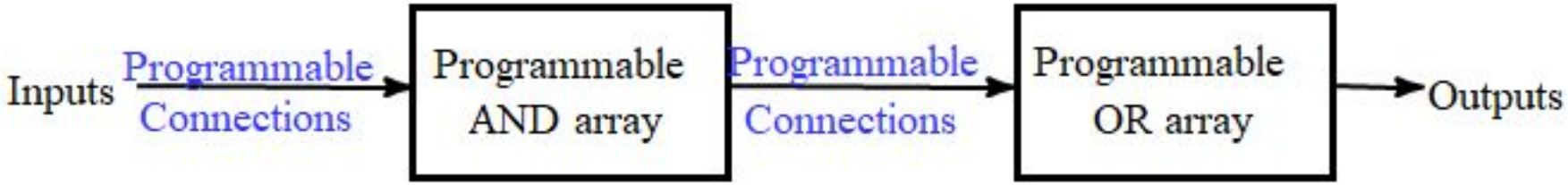

(c) Programmable logic array (PLA) device

Programmable Logic Array (PLA)

- Use to implement circuits in SOP form
- The connections in the AND plane are programmable
- The connections in the OR plane are programmable

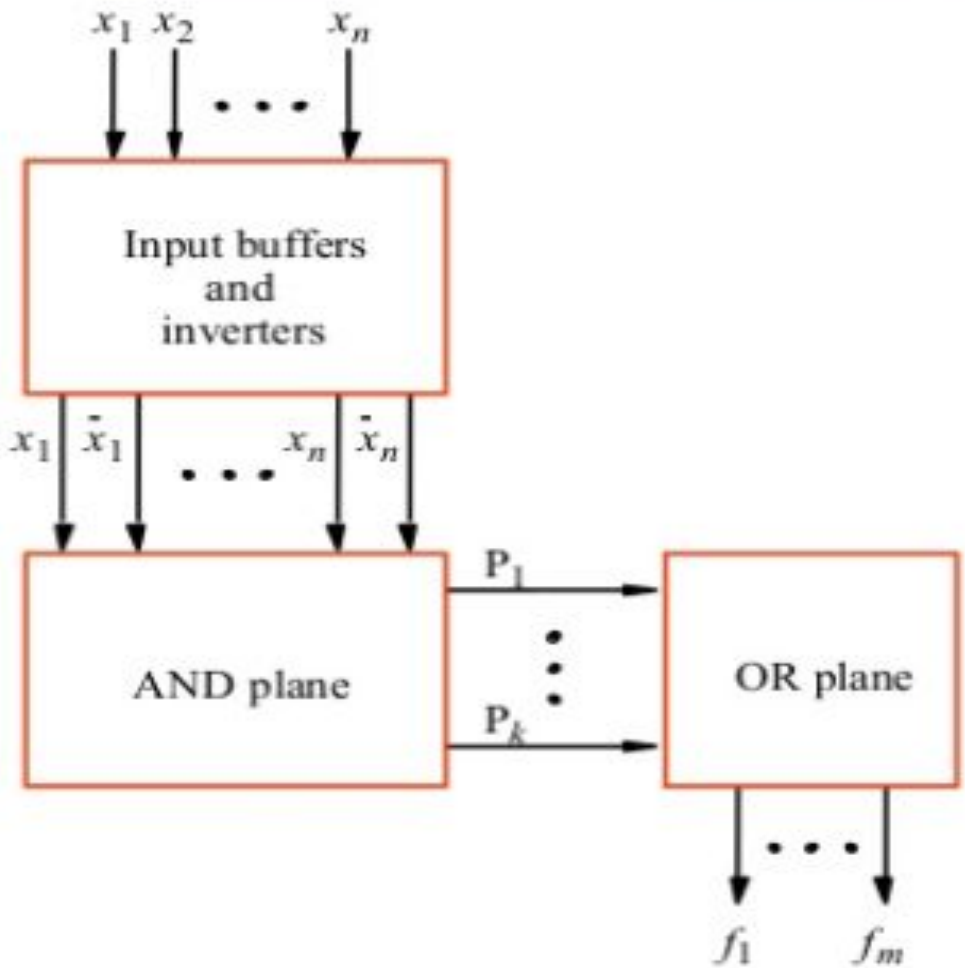

Programmable Array Logic (PAL)

- Also used to implement circuits in SOP form
- The connections in the AND plane are programmable
- The connections in the OR plane are <u>NOT</u> programmable

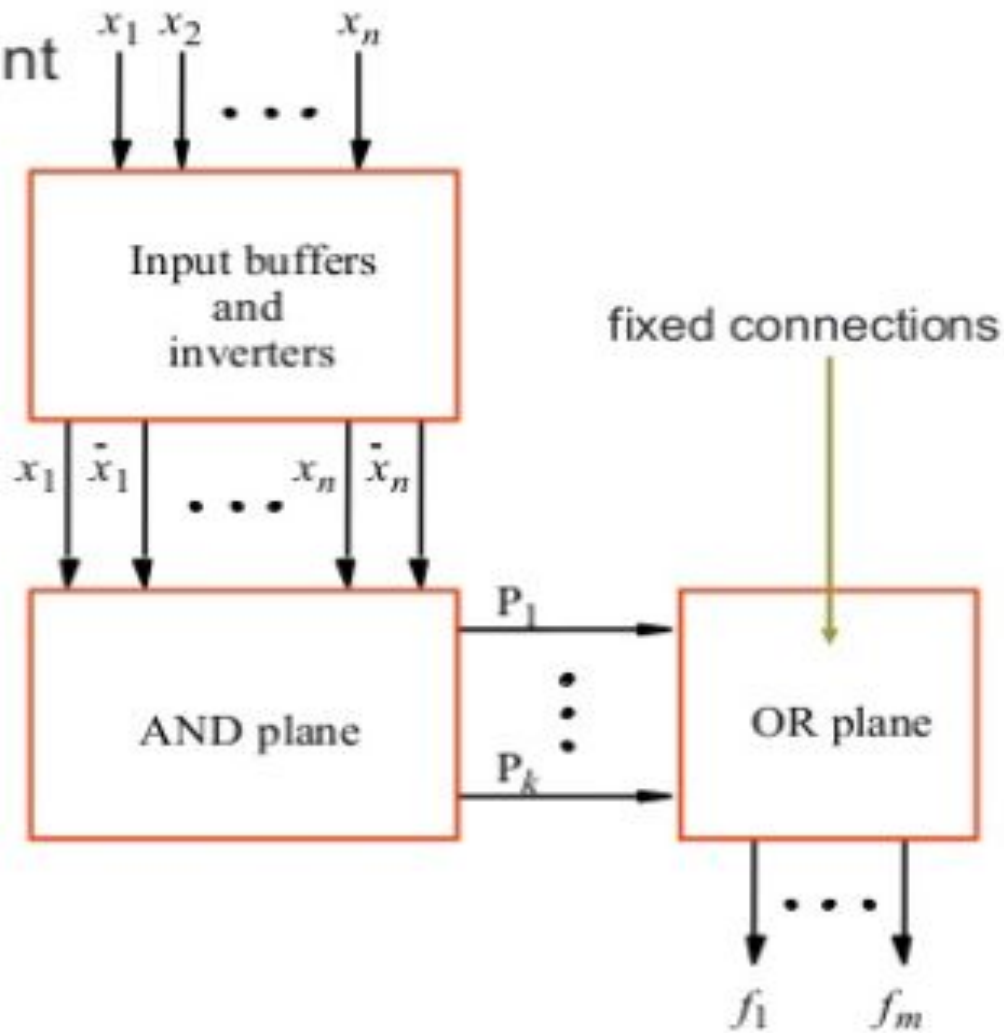

Comparing PALs and PLAs

- PALs have the same limitations as PLAs (small number of allowed AND terms) plus they have a fixed OR plane → less flexibility than PLAs
- PALs are simpler to manufacture, cheaper, and faster (better performance)
- PALs also often have extra circuitry connected to the output of each OR gate
  - The OR gate plus this circuitry is called a *macrocell*

The End.

Thank You.